G29 Driving Force™ Racing Wheel

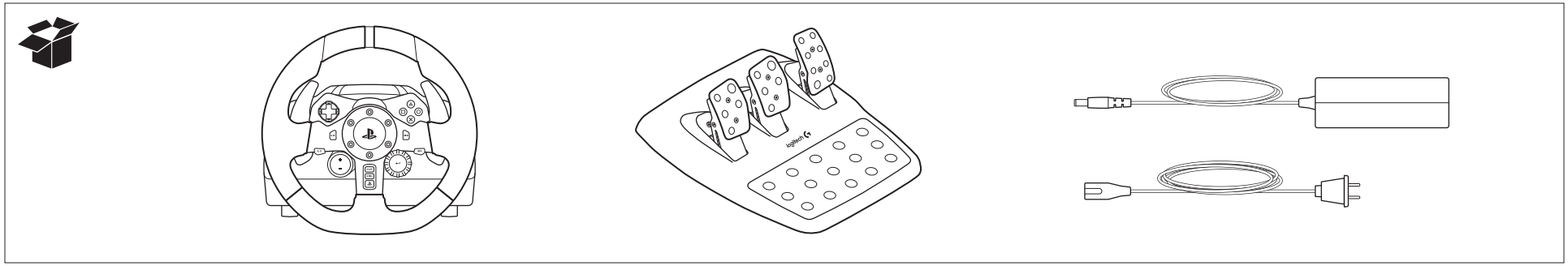

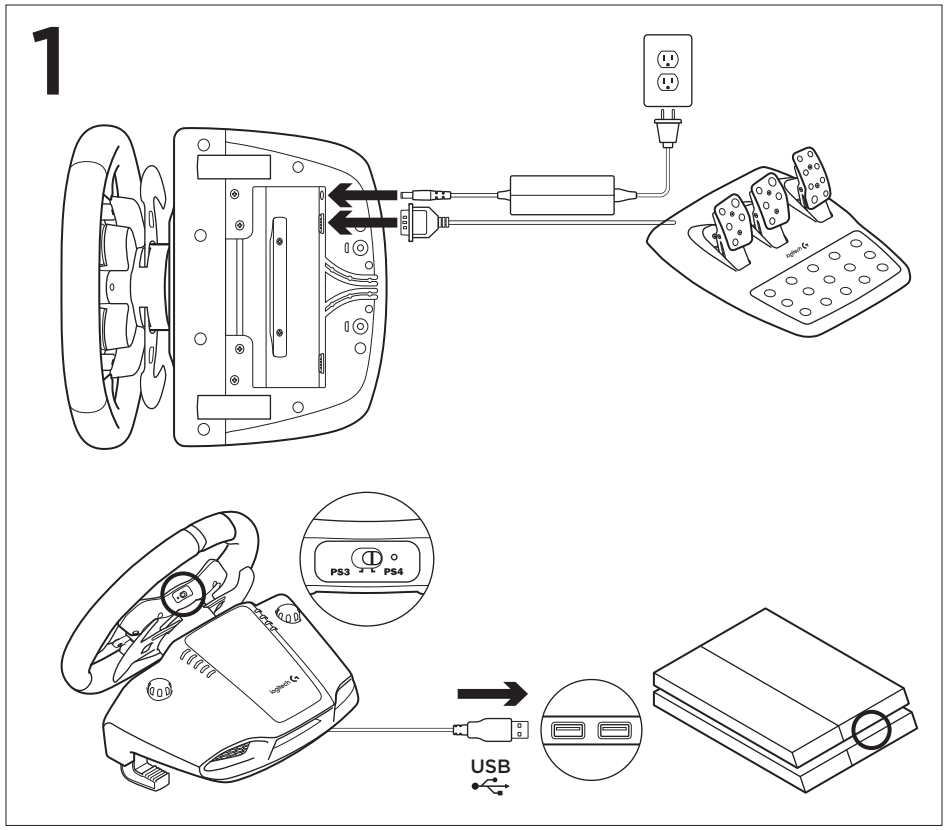

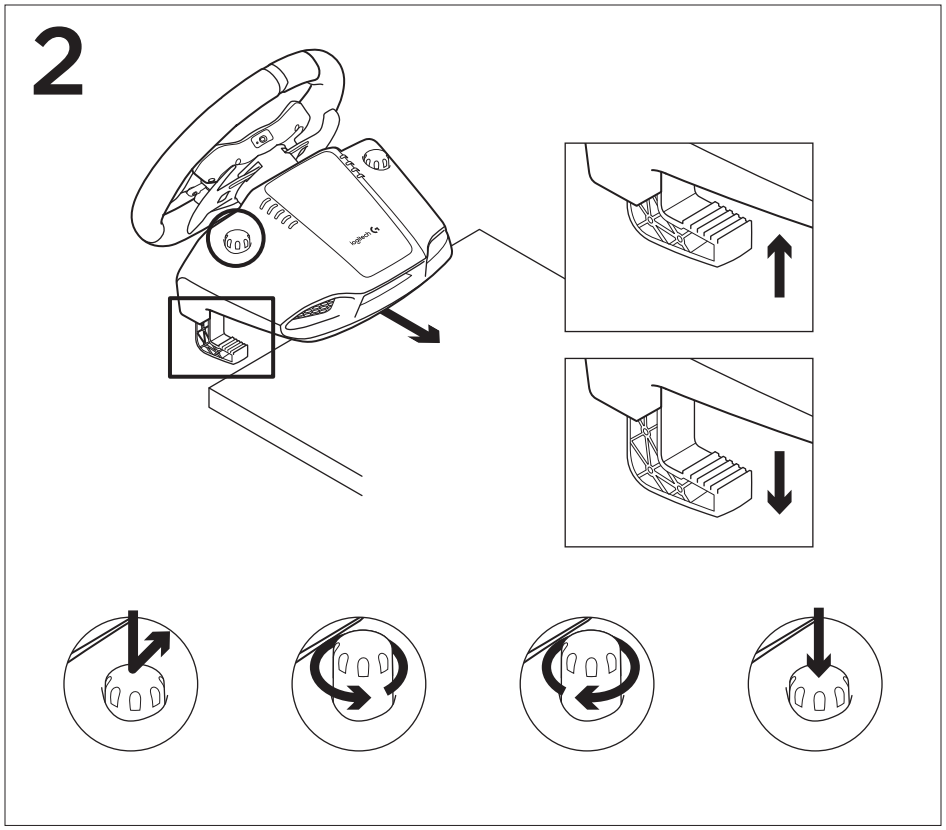

and "PlayStation" are registered trademarks of Sony Computer Entertainment Inc. All rights reserved.

PDF

www.logitech.com/support/g29

620-006490.005