BOSCH

Register your new device on MyBosch now and get free benefits:
bosch-home.com/welcome

MyBosch

Fridge-freezer

KGV..

en Table of contents

Safety and warning information 3
Information concerning disposal 6
Scope of delivery 6
Installation location 7
Ambient temperature and ventilation . 7
Connecting the appliance 8
Getting to know your appliance 8
Switching the appliance on 9
Setting the temperature 10
Usable capacity 10
Refrigerator compartment 10
Freezer compartment 11
Max. freezing capacity 11
Freezing and storing food 12
Freezing fresh food 12
Super freezing 13
Thawing frozen food 14
Interior fittings 14
Sticker “OK” 15
Switching off and disconnecting
the appliance 15
Defrosting 16
Cleaning the appliance 16
Odours 17
Light (LED) 18
Tips for saving energy 18
Operating noises 18
Eliminating minor faults yourself 19
Appliance self-test 20
Customer service 20

Safety and warning information

Before you switch ON the appliance

Please read the operating and installation instructions carefully! They contain important information on how to install, use and maintain the appliance.

The manufacturer is not liable if you fail to comply with the instructions and warnings. Retain all documents for subsequent use or for the next owner.

Technical safety

Fire hazard

The tubes of the refrigeration circuit convey a small quantity of an environmentally friendly but flammable refrigerant (R600a). It does not damage the ozone layer and does not increase the greenhouse effect. If refrigerant escapes, it may injure your eyes or ignite.

If damage has occurred

- Keep naked flames and/or ignition sources away from the appliance,
- thoroughly ventilate the room for several minutes,
- switch off the appliance and pull out the mains plug,
- inform customer service.

The more refrigerant an appliance contains, the larger the room must be in which the appliance is situated. Leaking refrigerant can form a flammable gas-air mixture in rooms which are too small. The room must be at least 1 m^3 per 8 g of refrigerant. The amount of refrigerant in your appliance is indicated on the rating plate inside the appliance.

When installing the appliance, ensure that the mains cable is not trapped or damaged.

If the power cord of this appliance is damaged, it must be replaced by the manufacturer, Customer Service or a similarly qualified person. Improper installations and repairs may put the user at considerable risk.

Repairs may be performed by the manufacturer, customer service or a similarly qualified person only.

Only original parts supplied by the manufacturer may be used. The manufacturer guarantees that only these parts satisfy the safety requirements.

Do not use multiple sockets, extension leads or adapters.

Fire hazard

Portable multiple outlets or power supplies may overheat, causing a fire.
Never leave portable multiple outlets or portable power supplies behind the appliance.

Important information when using the appliance

- Never use electrical appliances inside the appliance (e.g. heaters, electric ice makers, etc.). Risk of explosion!
- Never defrost or clean the appliance with a steam cleaner! The steam may penetrate electrical parts and cause a short-circuit. Risk of electric shock!
- Do not use additional means to accelerate the defrosting process other than those recommended by the manufacturer. Risk of explosion!
- Do not use pointed or sharp-edged implements to remove frost or layers of ice. You might damage the refrigerant tubes.Leaking refrigerant may cause eye injuries or ignite.
- Do not store products which contain flammable propellant (e.g. spray cans) or explosive substances in the appliance. Risk of explosion!
- Do not stand on or lean heavily against the base of the appliance, drawers, doors, etc.
- For defrosting and cleaning, pull out the mains plug or switch off the fuse. Do not pull out the mains plug by tugging on the power cord.
- Store high-percentage alcohol tightly sealed and in an upright position.
- Keep plastic parts and the door seal free of oil and grease. Otherwise, plastic parts and the door seal will become porous.
- Never cover or block the ventilation openings of the appliance.

- **Avoiding placing children and vulnerable people at risk:**

  At risk here are children, people who have limited physical, mental or sensory abilities, as well as people who have inadequate knowledge concerning safe operation of the appliance.

  Check that children and vulnerable people have understood the hazards.

  A person responsible for safety must supervise or instruct children and vulnerable people who are using the appliance.

  Only children aged 8 years and above may use the appliance.

  Supervise children while the appliance is being cleaned or maintained.

  Never allow children to play with the appliance.
- Do not store bottled or canned liquids (especially carbonated drinks) in the freezer compartment.Bottles and cans may burst!
- Never put frozen food straight from the freezer compartment in your mouth.
  Risk of low-temperature burns!
- Avoid prolonged touching of frozen food, ice or the evaporator pipes, etc.
  Risk of low-temperature burns!

Children in the household

- Keep children away from packaging and its parts.
  Danger of suffocation from folding cartons and plastic film!
- Do not allow children to play with the appliance!
- If the appliance features a lock:
  keep the key out of the reach of children!

General regulations

The appliance is suitable

- for refrigerating and freezing food,
- for making ice.

This appliance is intended for use in the home and the home environment.

The refrigeration circuit has been checked for leaks.

This appliance complies with the relevant safety regulations for electrical appliances and is fitted with noise suppression.

This appliance is intended for use up to a maximum height of 2000 metres above sea level.

Information concerning disposal

♻ Disposal of packaging

The packaging protects your appliance from damage during transit. All utilised materials are environmentally safe and recyclable. Please help us by disposing of the packaging in an environmentally friendly manner.

Please ask your dealer or inquire at your local authority about current means of disposal.

♻ Disposal of your old appliance

Old appliances are not worthless rubbish! Valuable raw materials can be reclaimed by recycling old appliances.

This appliance is labelled in accordance with European Directive 2012/19/EU concerning used electrical and electronic appliances (waste electrical and electronic equipment - WEEE). The guideline determines the framework for the return and recycling of used appliances as applicable throughout the EU.

⚠ Warning

Redundant appliances

1. Pull out the mains plug.
2. Cut off the power cord and discard with the mains plug.
3. Do not take out the trays and receptacles: children are therefore prevented from climbing in!
4. Do not allow children to play with the appliance once it has spent its useful life. Danger of suffocation!

Refrigerators contain refrigerant and gases in the insulation. Refrigerant and gases must be disposed of professionally. Ensure that tubing of the refrigerant circuit is not damaged prior to proper disposal.

Scope of delivery

After unpacking all parts, check for any damage in transit.

If you have any complaints, please contact the dealer from whom you purchased the appliance or our customer service.

The delivery consists of the following parts:

- Free-standing appliance
- Interior fittings (depending on model)
- Bag containing installation materials
- Operating instructions
- Installation manual
- Customer service booklet
- Warranty enclosure
- Information on the energy consumption and noises

Installation location

A dry, well ventilated room is suitable as an installation location. The installation location should not be exposed to direct sunlight and not placed near a heat source, e.g. a cooker, radiator, etc. If installation next to a heat source is unavoidable, use a suitable insulating plate or observe the following minimum distances from the heat source:

- 3 cm to electric or gas cookers.
- 30 cm to an oil or coal-fired cooker.

The floor of the installation location must not give way; if required, reinforce floor. If the floor is uneven, compensate with supports.

Distance from wall

Fig. 3

A gap is not required between the appliance and side wall. The containers and shelves are still fully extendable.

Reversing the door

(if required)

If required, we recommend that you have the door hinges changed over by our customer service. You can find out the costs for changing over the door hinges from your appropriate customer service.

⚠ Warning

While changing over the door hinges, ensure that the appliance is not connected to the power supply. Pull out the mains plug beforehand. To prevent damaging the back of the appliance, place adequate padding underneath. Carefully place the appliance on its back.

Note

If the appliance is placed on its back, ensure that the wall spacer is not fitted.

Ambient temperature and ventilation

Ambient temperature

The appliance is designed for a specific climate class. Depending on the climate class, the appliance can be operated at the following temperatures.

The climate class can be found on the rating plate. Fig. 18

Climate class	Permitted ambient temperature
SN	+10 °C to 32 °C
N	+16 °C to 32 °C
ST	+16 °C to 38 °C
T	+16 °C to 43 °C

Note

The appliance is fully functional within the room temperature limits of the indicated climatic class. If an appliance of climatic class SN is operated at colder room temperatures, the appliance will not be damaged up to a temperature of +5 °C.

Ventilation

Fig. 4

The air on the rear panel of the appliance heats up. Conduction of the heated air must not be obstructed. Otherwise, the refrigerating unit must work harder. This increases power consumption. Therefore: Never cover or block the ventilation openings!

Connecting the appliance

After installing the appliance, wait at least 1 hour until the appliance is switched on. During transportation the oil in the compressor may have flowed into the refrigeration system.

Before switching on the appliance for the first time, clean the interior of the appliance (see chapter “Cleaning the appliance”).

Electrical connection

The socket must be near the appliance and also freely accessible following installation of the appliance.

⚠ **Warning**

Risk of electric shock!

If the length of the mains cable is inadequate, never use multiple sockets or extension leads. Instead, please contact Customer Service for alternatives.

The appliance complies with protection class I. Connect the appliance to 220–240 V/50 Hz alternating current via a correctly installed socket with protective conductor. The socket must be protected by a 10 A to 16 A fuse.

For appliances operated in non-European countries, check whether the indicated voltage and current type match the values of your electricity supply. This information can be found on the rating plate, Fig. 18.

⚠ **Warning**

Never connect the appliance to electronic energy saver plugs.

Our appliances can be used with mains and sine-controlled inverters. Mains-controlled inverters are used for photovoltaic systems which are connected directly to the national grid. Sine-controlled inverters must be used for isolated applications (e.g. on ships or in mountain lodges) which are not connected directly to the national grid.

Getting to know your appliance

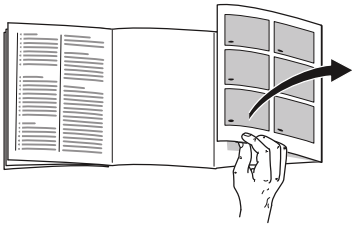

Please fold out the illustrated last page. These operating instructions refer to several models.

The features of the models may vary.

The diagrams may differ.

Fig. 1

* Not all models.

1–4	Controls
5	Light (LED)
6	Glass shelf in the refrigerator compartment
7	Vegetable container
8	Butter and cheese compartment *
9	Egg rack*
10	Shelf for large bottles

11 Frozen food drawer (small)
12 Glass shelf in the freezer compartment
13 Frozen food drawer (large)
14 Condensation outlet
15 Height-adjustable feet

A Refrigerator compartment
B Freezer compartment

Controls

Fig. 2

1 **On/Off button**
Serves to switch the whole appliance on and off.

2 **Temperature display refrigerator compartment**
The numbers correspond to the set refrigerator compartment temperatures in °C.

3 **Display super freezing**
Illuminates when super freezing is on.

4 **Refrigerator compartment temperature selection button**
The button sets the temperature in the refrigerator compartment.

Switching the appliance on

Fig. 2

Switch on the appliance with the On/Off button 1.

The appliance begins to cool. Light is switched on when the door is open.

We recommend a setting of +4 °C.

Operating tips

- After the appliance has been switched on, it may take several hours until the set temperatures have been reached.

  Do not put any food in the appliance beforehand.
- While the refrigeration unit is running, water droplets or a thin layer of ice may form at the rear panel of the refrigerator. This is nothing unusual. It is not necessary to scrape off the frost or wipe off the water droplets. The rear panel defrosts automatically. The condensation collects in the drainage channel, Fig. 14, and is conveyed to the refrigeration unit where it evaporates.
- The sides of the housing are sometimes heated slightly. This prevents condensation in the area of the door seal.
- If the freezer compartment door cannot be immediately re-opened after it has been closed, wait until the resulting low pressure has equalised.
- The refrigeration system may cause several areas of the freezer shelves to frost quickly. This does not affect function or power consumption. The appliance does not require defrosting until the entire surface of the freezer shelf is covered with more than 5 mm of frost or ice.

Setting the temperature

Fig. 2

Refrigerator compartment

The temperature can be set from +2 °C to +8 °C.

Keep pressing temperature setting button 4 until the required refrigerator compartment temperature is set.

The value last selected is saved. The set temperature is indicated on temperature display 2.

Freezer compartment

The temperature in the freezer compartment depends on the temperature in the refrigerator compartment.

Lower temperatures in the refrigerator compartment also cause lower temperatures in the freezer compartment.

Usable capacity

Information on the usable capacity can be found inside your appliance on the rating plate. Fig. 18

Fully utilising the freezer volume

The maximum amount of food can be placed in the freezer by removing all fittings. The food can be stacked directly on the shelves and in the bottom of the freezer compartment.

Removing the fittings

Pull out the frozen food container all the way, lift at the front and remove. Fig. 15

Refrigerator compartment

The refrigerator compartment is the ideal storage location for meat, sausage, fish, dairy products, eggs, ready meals and pastries.

Storing food

- Store fresh, undamaged food. The quality and freshness will then be retained for longer.
- In the case of ready-made products and bottled goods, observe the best-before date or use-by date specified by the manufacturer.
- To retain aroma, colour and freshness, pack or cover food well before placing in the appliance. This will prevent the transfer of flavours and the discolouration of plastic parts in the refrigerator compartment.
- Allow warm food and drinks to cool down before placing in the appliance.

Note

Avoid contact between food and rear panel. Otherwise the air circulation will be impaired.

Food or packaging could freeze to the rear panel.

Note the chill zones in the refrigerator compartment

The air circulation in the refrigerator compartment creates different chill zones:

- Warmest zone is at the very top of the door.

  Note

  Store e.g. hard cheese and butter in the warmest zone. Cheese can then continue to release its flavour and the butter will still be easy to spread.

- Coldest zone is in the pull-out container.

  Note

  Store perishable food (e.g. fish, sausage, meat) in the coldest zone.

Vegetable container with humidity controller

Fig. 12
To create the optimum storage climate for fruit and vegetables, you can set the air humidity in the vegetable container depending on the quantity stored:

- smaller quantities of fruit and vegetables – high air humidity
- large quantities of fruit and vegetables – low air humidity

Notes

- Fruit sensitive to cold (e.g. pineapple, banana, papaya and citrus fruit) and vegetables sensitive to cold (e.g. aubergines, cucumbers, zucchini, peppers, tomatoes and potatoes) should be stored outside the refrigerator at temperatures of approx. +8 °C to +12 °C for optimum preservation of quality and flavour.
- Condensation may form in the vegetable container depending on the type and quantity of products stored. Remove condensation with a dry cloth and adjust air humidity in the vegetable container with the humidity controller.

Freezer compartment

Use the freezer compartment

- To store deep-frozen food.
- To make ice cubes.
- To freeze food.

Note

Ensure that the freezer compartment door has been closed properly. If the door is open, the frozen food will thaw. The freezer compartment will become covered in thick ice. Also: waste of energy due to high power consumption!

Max. freezing capacity

Information about the max. freezing capacity within 24 hours can be found on the rating plate. Fig. 18

Prerequisites for max. freezing capacity

- Switch on super freezing before placing fresh products in the compartment (see chapter entitled “Super freezing”).
- Remove the fittings. The food can be stacked directly on the shelves and in the bottom of the freezer compartment.

- Freeze large quantities of food preferably in the very top compartment where food freezes particularly quickly and therefore also gently.
- Freeze fresh food as close as possible to the side panels.

Freezing and storing food

Purchasing frozen food

- Packaging must not be damaged.
- Use by the “use by” date.
- Temperature in the supermarket freezer must be -18 °C or lower.
- If possible, transport deep-frozen food in an insulated bag and place quickly in the freezer compartment.

Freezing food

- Freeze fresh and undamaged food only.
- Keep food which is to be frozen away from food which is already frozen.
- To prevent food from losing its flavour or drying out, place in airtight containers.

Storing frozen food

Insert frozen food container all the way to ensure unrestricted air circulation.

If you have to store lots of food, it is possible to transfer the food to the glass shelves and stack it on the base of the freezer base.

1. To do this, remove all the frozen food containers.
2. Pull out the frozen food containers all the way, lift at the front and remove. Fig. 15

Freezing fresh food

Freeze fresh and undamaged food only.

To retain the best possible nutritional value, flavour and colour, vegetables should be blanched before freezing. Aubergines, peppers, zucchini and asparagus do not require blanching.

Literature on freezing and blanching can be found in bookshops.

Note

Keep food which is to be frozen away from food which is already frozen.

- The following foods are suitable for freezing:
  Cakes and pastries, fish and seafood, meat, game, poultry, vegetables, fruit, herbs, eggs without shells, dairy products such as cheese, butter and quark, ready meals and leftovers such as soups, stews, cooked meat and fish, potato dishes, soufflés and desserts.
- The following foods are not suitable for freezing:
  Types of vegetables, which are usually consumed raw, such as lettuce or radishes, eggs in shells, grapes, whole apples, pears and peaches, hard-boiled eggs, yoghurt, soured milk, sour cream, crème fraîche and mayonnaise.

Packing frozen food

To prevent food from losing its flavour or drying out, place in airtight containers.

1. Place food in packaging.
2. Remove air.
3. Seal the wrapping.
4. Label packaging with contents and date of freezing.

Suitable packaging:
Cling wrap, tubular film made of polyethylene, aluminium foil, freezer containers.
These products are available from specialist outlets.

Unsuitable packaging:
Wrapping paper, greaseproof paper, cellophane, bin liners and used shopping bags.

Items suitable for sealing packaged food:
Rubber bands, plastic clips, string, cold-resistant adhesive tape, etc.

Bags and tubular film made of polyethylene (PE) can be sealed with a film heat sealer.

Shelf life of frozen food

Storage duration depends on the type of food.

At a temperature of -18 °C:

- Fish, sausage, ready meals and cakes and pastries:

  up to 6 months
- Cheese, poultry and meat:

  up to 8 months
- Vegetables and fruit:

  up to 12 months

Super freezing

Food should be frozen solid as quickly as possible in order to retain vitamins, nutritional value, appearance and flavour.

Several hours before placing fresh food in the freezer compartment, switch on super freezing to prevent an unwanted temperature rise.

As a rule, 4–6 hours is adequate.

This appliance runs constantly and the freezer compartment drops to a very low temperature.

If the max. freezing capacity is to be used, super freezing must be switched on for 24 hours before the fresh produce is placed in the freezer compartment.

Smaller quantities of food (up to 2 kg) can be frozen without “super freezing”.

Switching on and off

Fig. 2

Keep pressing the temperature selection button 4 until the Super display 3 is lit.

Super freezing automatically switches off after approx. 2½ days.

Thawing frozen food

Depending on the type and application, select one of the following options:

- at room temperature
- in the refrigerator
- in an electric oven, with/without fan assisted hot-air
- in the microwave

Caution

Do not refreeze thawing or thawed food. Only ready meals (boiled or fried) may be refrozen.

No longer store the frozen produce for the max. storage period.

Interior fittings

(not all models)

Butter and cheese compartment

To open the butter compartment, gently press in the middle of the butter compartment flap.

To clean the compartment, lift it at the bottom and take out.

Adjustable “EasyLift” door shelf

Fig. 5
The height of the shelf can be adjusted without taking it out.

Simultaneously press side buttons on the shelf to move the shelf downwards. It can be moved upwards without pressing the buttons.

Bottle holder

Fig. 7
The bottle holder prevents bottles from falling over when the door is opened and closed.

Glass shelves

If required, you can vary the shelves inside the appliance: To do this, pull out shelf, lift at the front and take out.

Variable shelf

Fig. 8
The shelf can be folded down if required: Pull shelf forwards, lower and press backwards.

The shelf is suitable for storing food and bottles.

Pull-out container

Fig. 9
You can take out the container for loading and unloading. To do this, lift the container and pull out. The holder of the container is variable.

Bottle shelf

Fig. 10
Bottles can be stored securely on the bottle shelf. The holder can be adjusted.

Vegetable container insert

Fig. 11
The insert can be taken out.

Frozen food container (large)

Fig. 1/13

For the storage of large frozen items, e.g. turkey, duck and goose.

Note

Partition (if available) cannot be taken out.

Ice cube tray

Fig. 16

1. Fill the ice cube tray ¾ full of drinking water and place in the freezer compartment.
2. If the ice tray is stuck to the freezer compartment, loosen with a blunt implement only (spoon-handle).
3. To loosen the ice cubes, twist the ice tray slightly or hold briefly under flowing water.

Ice block

If a power failure or malfunction occurs, the ice blocks can be used to slow down the thawing process. The longest storage time is obtained by placing the ice pack on the food in the top compartment.

The ice blocks can also be used to cool food temporarily , e. g. in a cold bag.

Sticker “OK”

(not all models)

The sticker “OK” lets you check whether the refrigerator compartment achieves the safe temperature ranges of +4 °C or colder recommended for food. If the sticker does not indicate “OK”, gradually reduce the temperature.

Note

When the appliance is switched on, it may take up to 12 hours until the set temperature is reached.

Correct setting

Switching off and disconnecting the appliance

Turn off appliance

Fig. 2

Press the On/Off button 1.
Temperature display 2 goes out, refrigeration unit switches off.

Disconnecting the appliance

If you do not use the appliance for a prolonged period:

1. Switch off the appliance.
2. Pull out mains plug or switch off fuse.
3. Clean the appliance.
4. Leave the appliance door open.

Defrosting

Refrigerator compartment

Defrosting is actuated automatically.

The condensation flows into the evaporation area of the appliance via the condensation channels and the drainage hole.

Freezer compartment

The freezer compartment does not defrost automatically, otherwise the frozen food would start thawing. A layer of frost in the freezer compartment impairs refrigeration of the frozen food and increases power consumption. Remove the layer of hoarfrost regularly.

⚠ **Caution**

Do not scrape off hoarfrost or ice with a knife or pointed object. You could damage the refrigerant tubes. Leaking refrigerant may ignite or cause eye injuries.

Proceed as follows:

Note

Approx. 4 hours before defrosting the appliance, switch on super freezing so that the food drops to a very low temperature and can therefore be stored at room temperature for a longer period.

1. Switch off appliance to defrost it.
2. Pull out mains plug or switch off fuse.
3. Place the freezer drawers containing the food in a cool location. Place the ice pack (if enclosed) on the food.
4. Open condensation outlet. Fig. 17
5. The shelf for large bottles can be used to collect the condensation. To do this, take out the shelf for large bottles (see chapter entitled Cleaning the appliance) and place under the open condensation outlet.
6. To accelerate the defrosting process, place two pans of hot water on a trivet in the appliance.
7. When the freezer compartment has defrosted, pour the water out of the freezer drawer. Wipe any remaining water off the bottom of the freezer compartment with a sponge.
8. Close condensation outlet.
9. Re-insert shelf for large bottles into the door.
10. When defrosting is complete, connect and switch on the appliance again.

Cleaning the appliance

⚠ **Caution**

- Do not use abrasive, chloride or acidic cleaning agents or solvents.
- Do not use scouring or abrasive sponges.

  The metallic surfaces could corrode.
- Never clean shelves and containers in the dishwasher.

  The parts may become deformed!

Proceed as follows:

1. Before cleaning: Switch off the appliance.
2. Pull out mains plug or switch off fuse.
3. Take out the frozen food and store in a cool location. Place the ice pack (if enclosed) on the food.
4. Wait until the layer of frost has thawed.
5. Clean the appliance with a soft cloth, lukewarm water and a little pH neutral washing-up liquid. The rinsing water must not run into the light.
6. Wipe the door seal with clear water only and then wipe dry thoroughly.
7. After cleaning reconnect and switch the appliance back on.
8. Put the frozen food back into the appliance.

Interior fittings

All variable parts of the appliance can be taken out for cleaning.

Take out shelves in the door
Fig. 6

Lift shelves upwards and take out.

Take out glass shelves
To do this, pull out shelf, lift at the front and take out.

Taking out pull-out container
Lift the container and pull out.

Condensation outlet fascia
To clean the condensation outlet channel, the glass shelf above the vegetable container, Fig. 1/7, must be separated from the condensation outlet fascia:

1. Take out the glass shelf.
2. Lift condensation outlet fascia and take out. Fig. 14

Note
Regularly clean the condensation channel and drainage hole with a cotton bud or similar implement to ensure that the condensation can drain.

Vegetable drawer
(not all models)

The fascia of the vegetable drawer can be removed for cleaning.

Press side buttons in succession and remove fascia from the vegetable drawer. Fig. 13

Removing the container
Fig. 15

Pull out the container all the way, lift at the front and remove.

Odours

If you experience unpleasant odours:

1. Switch off the appliance with the On/Off button. Fig. 2/1
2. Take all food out of the appliance.
3. Clean interior (see chapter “Cleaning the appliance”).
4. Clean all packages.
5. Seal strong smelling food in order to avoid odours from forming.
6. Switch the appliance on again.
7. Store food in the appliance.
8. Check whether the formation of odours is still occuring after 24 hours.

Light (LED)

Your appliance features a maintenance-free LED light.

These lights may be repaired by customer service or authorised technicians only.

Tips for saving energy

- Install the appliance in a dry, well ventilated room! The appliance should not be installed in direct sunlight or near a heat source (e.g. radiator, cooker).

  If required, use an insulating plate.
- Allow warm food and drinks to cool down before placing in the appliance.
- Thaw frozen food in the refrigerator compartment and use the low temperature of the frozen food to cool refrigerated food.
- Regularly defrost the freezer compartment to remove the layer of frost.

  A layer of hoarfrost will impair refrigeration of the frozen food and increase power consumption.
- Open the appliance as briefly as possible.
- To avoid increased power consumption, occasionally clean the back of the appliance.
- If available:
  Fit wall spacers to obtain the indicated energy rating of the appliance (see Installation instructions). A reduced wall gap will not restrict the function of the appliance. The energy rating may then increase slightly. The gap of 75 mm must not be exceeded.
- The arrangement of the fittings does not affect the energy rating of the appliance.

Operating noises

Quite normal noises

Droning
Motors are running (e.g. refrigerating units, fan).

Bubbling, humming or gurgling noises
Refrigerant is flowing through the tubing.

Clicking
Motor, switches or solenoid valves are switching on/off.

Preventing noises

The appliance is not level
Please align the appliance with a spirit level. Use the height-adjustable feet or place packing underneath them.

The appliance is not free-standing
Please move the appliance away from adjacent units or appliances.

Containers or storage areas wobble or stick
Please check the removable parts and re-insert them correctly if required.

Bottles or receptacles are touching each other
Move the bottles or receptacles slightly away from each other.

Eliminating minor faults yourself

Before you call customer service:

Please check whether you can eliminate the fault yourself based on the following information.

Customer service will charge you for advice – even if the appliance is still under guarantee!

Fault	Possible cause	Remedial action
Temperature differs greatly from the set value.		In some cases it is adequate to switch off the appliance for 5 minutes. If the temperature is too high wait a few hours and check whether the temperature has approached the set value. If the temperature is too low check the temperature again the next day.
Displays do not illuminate.	Power failure; the fuse has been switched off; the mains plug has not been inserted properly.	Connect mains plug. Check whether the power is on, check the fuses.
The temperature in the refrigerator compartment is too cold.	Temperature has been set too low.	Increase the temperature (see Selecting the temperature).
Floor of the refrigerator compartment is wet.	The condensation channels or drainage hole are blocked.	Clean the condensation channels and the drainage hole. See chapter Cleaning the appliance. Fig. 14
The temperature in the freezer compartment is too warm.	Appliance opened frequently.	Do not open the appliance unnecessarily.
	The ventilation openings have been covered.	Remove obstacles.
	Large quantities of fresh food are being frozen.	Do not exceed max. freezing capacity.
Appliance is not cooling, temperature display and light are lit.	Showroom mode is switched on.	Start appliance self-test (see chapter “Appliance self-test”). When the programme has ended, the appliance switches over to normal operation.

Fault	Possible cause	Remedial action
Condensation accumulates on the surface of the appliance and on the shelves inside.	The effect is reinforced if ambient temperatures are warm and humid.	Wipe away the water with a soft, dry cloth. ■ Open the appliance as briefly as possible ■ Make sure that the appliance is always closed properly.

Appliance self-test

Your appliance features an automatic self-test program which shows you sources of faults which may be repaired by customer service only.

Starting the appliance self-test

Fig. 2

1. Switch off the appliance with the On/ Off button 1 and wait 5 minutes.
2. Switch on the appliance with the On/ Off button 1 and hold down the temperature setting button 4 for 3-5 seconds within the first 10 seconds until 2 °C is lit on the temperature display 2.

   The self-test programme starts, when the temperature displays lit up in succession.

When after a short time the appliance displays the set temperature prior to the self-test, everything is ok.

If the super display 3 flashes for 10 seconds, an error has occurred. Inform customer service.

Ending the appliance self-test

When the programme has ended, the appliance switches over to normal operation.

Customer service

Your local customer service can be found in the telephone directory or in the customer-service index. Please provide customer service with the appliance product number (E-Nr.) and production number (FD-Nr.).

This information can be found on the rating plate. Fig. 18

To prevent unnecessary call-outs, please assist customer service by quoting the product and production numbers. This will save you additional costs.

Repair order and advice on faults

Contact information for all countries can be found on the enclosed customer service list.

GB	0344 892 8979	Calls charged at local or mobile rate.
IE	01450 2655	0.03 € per minute at peak. Off peak 0.0088 € per minute.
US	800 944 2904	toll-free

1-4
5
6
7
A
8
9
10
11
12
13
B
14
15

1

°C
super
2 3 4 6 8

4 3 2 1

2

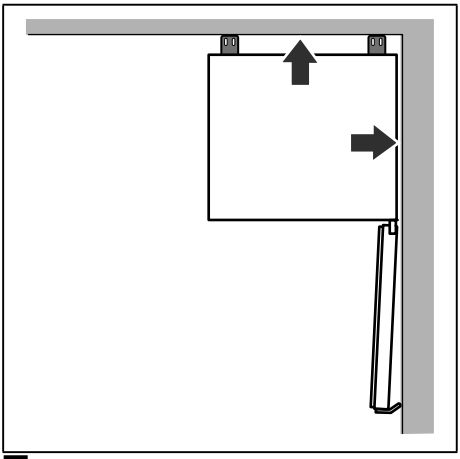

3

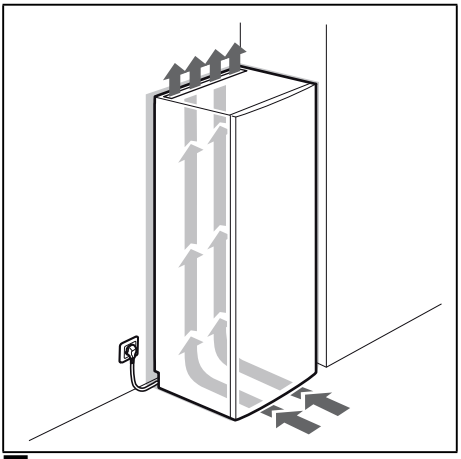

4

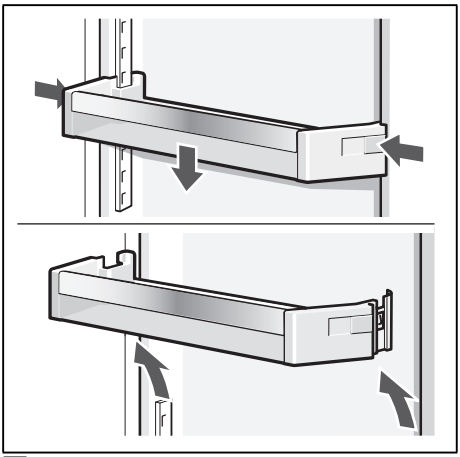

5

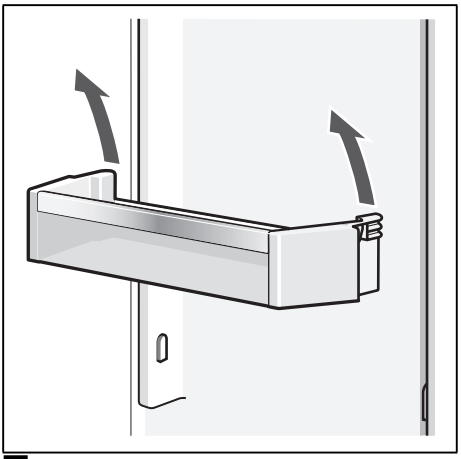

6

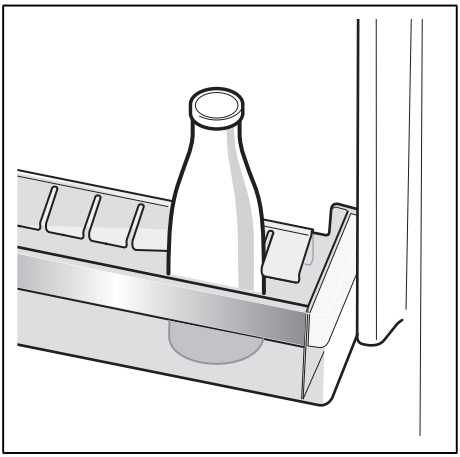

7

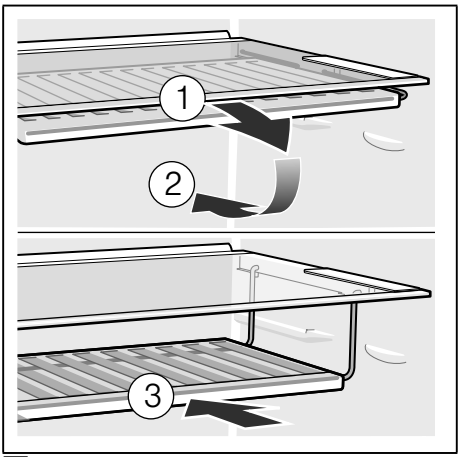

8

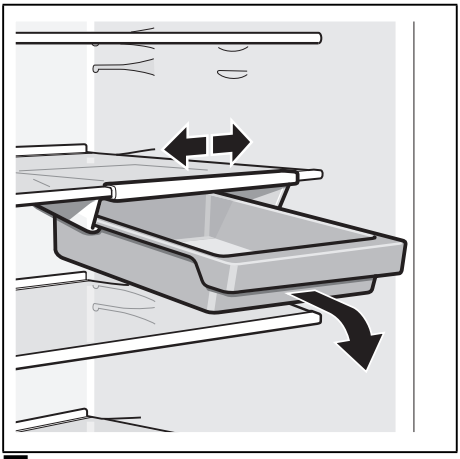

9

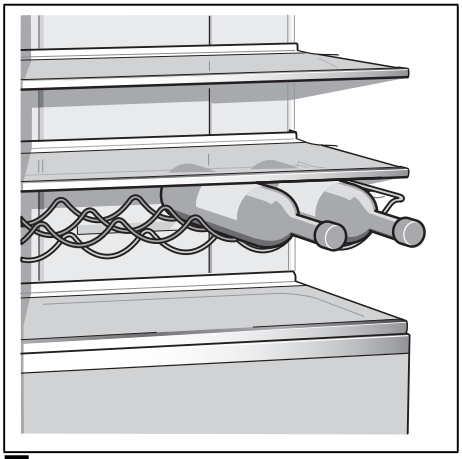

10

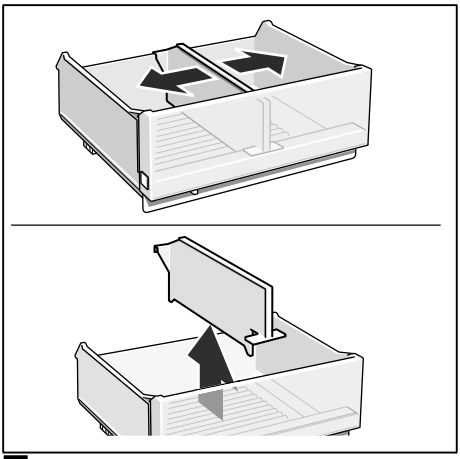

11

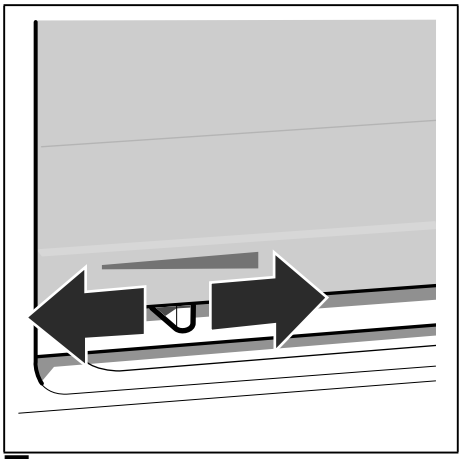

12

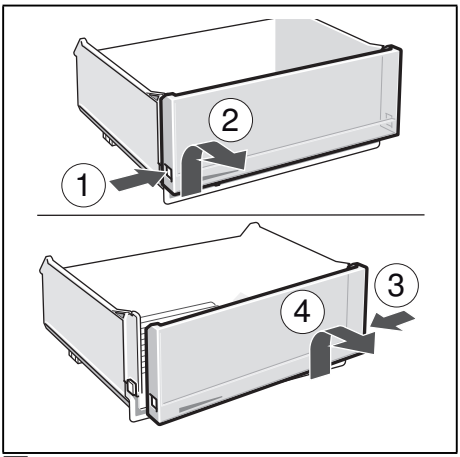

13

14

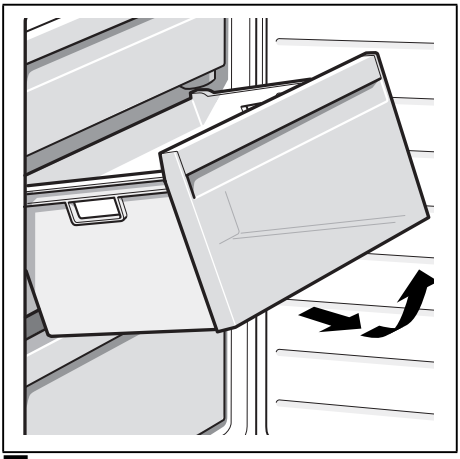

15

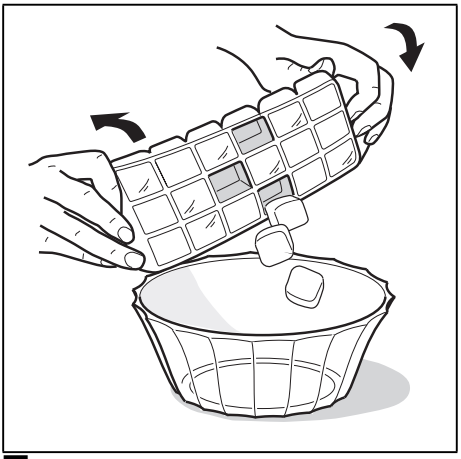

16

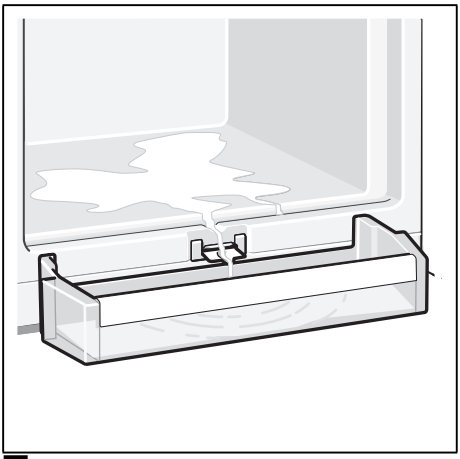

17

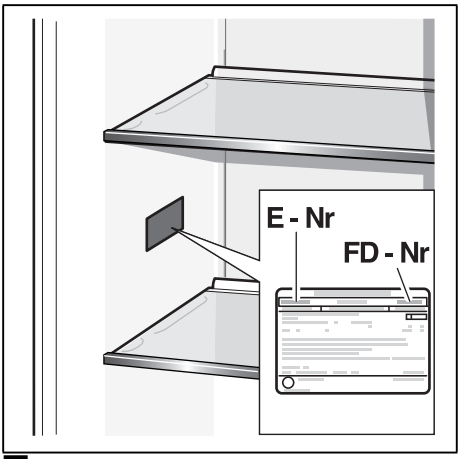

18

Thank you for buying a Bosch Home Appliance!

Register your new device on MyBosch now and profit directly from:

- **Expert tips & tricks for your appliance**
- **Warranty extension options**
- **Discounts for accessories & spare-parts**
- **Digital manual and all appliance data at hand**
- **Easy access to Bosch Home Appliances Service**

Free and easy registration – also on mobile phones:
www.bosch-home.com/welcome

Looking for help? You´ll find it here.

Expert advice for your Bosch home appliances, need help with problems or a repair from Bosch experts.
Find out everything about the many ways Bosch can support you:
www.bosch-home.com/service
Contact data of all countries are listed in the attachted service directory.

Bosch Home Appliance Group
P.O. Box 83 01 01
D-81701 Munich
Germany
www.bosch-home.com

9000942199 (9903)
en